How to Install a Verdigris EV1 (V1.9)

Welcome! This manual will guide you on how to install your new system. If you need direct assistance, call our support line at **1-844-837-3447** or email **support@verdigris.co**.

WARNING: Installation of a Verdigris EV1 should only be performed by a licensed electrician. You should consult your local inspector for compliance with electric codes. If the equipment is used in a manner not specified by the manufacturer, the protection provided by the equipment may be impaired.

Quick Start Installation Guide
setup.verdigris.co

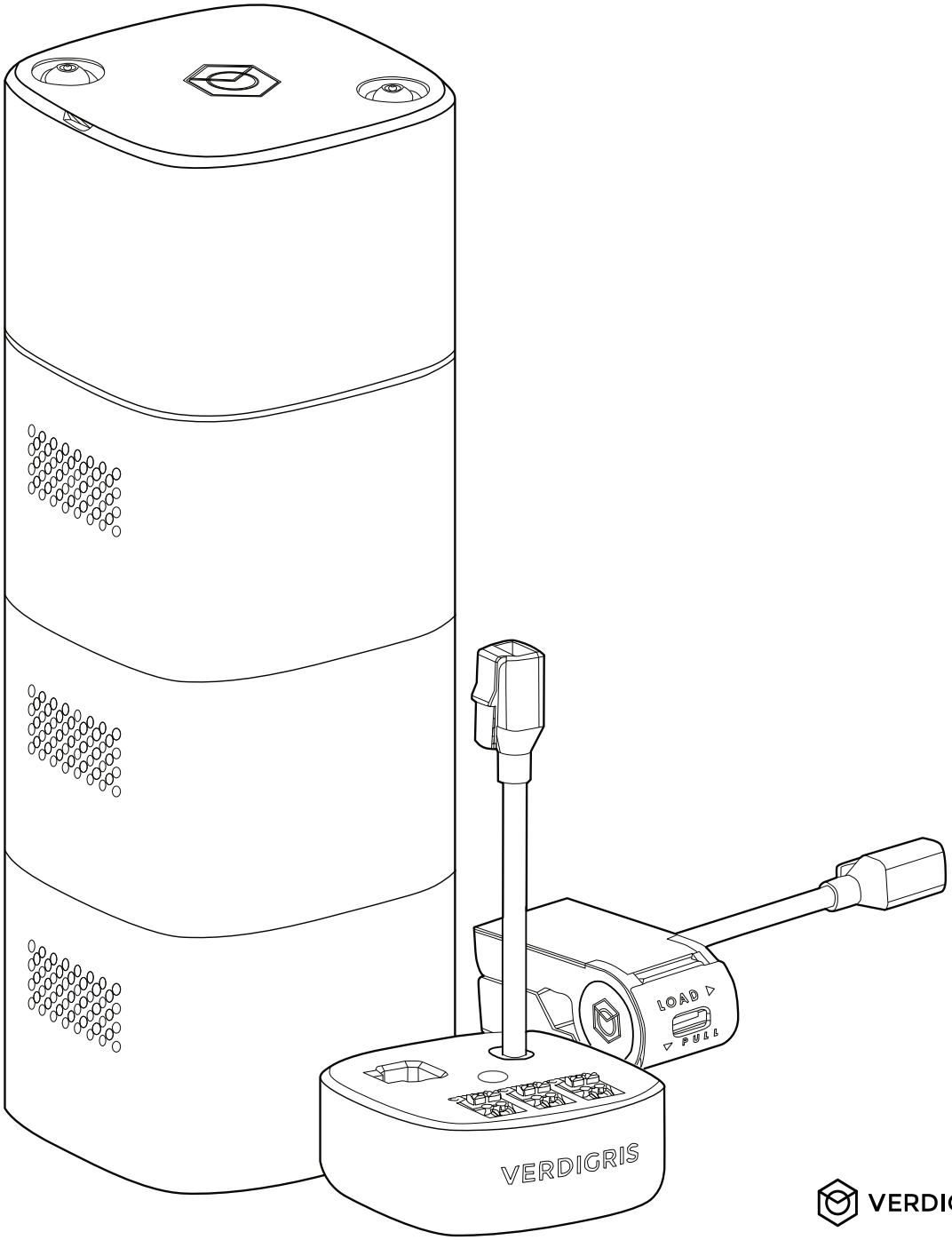

VERDIGRIS

Table of Contents

Verdigris for Commercial and Industrial Buildings **1**
Technical Specifications **2**
Energy Data Gateway 2
Data Transmission 2
Verdigris Smart CT (CTs) 2
Symbols on Equipment 2
Component List (Provided by Verdigris) **3**
Tools Required **4**
Tools 4
Parts 4
Recommended Voltage Tap Cables for Specific Panel Voltage Configurations 4
Prepare Installation **5**
Determine Panel Type 5
Select Energy Data Gateway Mounting Location & Install Field Wiring Compartment (FWC) 5
Select Breakers For Voltage Tap 6
Install Voltage Tap **7**
Voltage Tap Installation For Single-Phase Panel 7
Voltage Tap Installation For Split-Phase Panel 7
Voltage Tap Installation For Three-Phase Panel 7
Wire The Neutral 7
Install and Connect CTs **8**
Select Appropriate CTs 8
Verify CT Install Location 8
Install CTs 8
About Large CTs & Verdigris High Current CT Interface Modules 9
Connect Multiple CTs 10
Connect Multiple Verdigris High Current CT Interface Modules 10
Connect CTs 11
Connect CTs to the Energy Data Gateway 12
Installations Using Only CT Chains 12
Installations Using Only Verdigris High Current CT Interface Modules 13
Installations Using CTs and Verdigris High Current CT Interface Modules 14
Connect Voltage Cables to Energy Data Gateway 15
Mount Energy Data Gateway **16**
Location 1: Side of Panel (for surface-mount panels) 16
Location 2: Junction Box 17
System Checks & Clean Up **18**
Check the CTs 18
Powering Energy Data Gateway & System Checks 18
Clean Up and Close the Panel 18
Commission Energy Data Gateway **20**
Error Codes **21**
Future Panel Modifications **22**
Appendix: CE Declaration of Conformity **23**
Notes **24**

Verdigris for Commercial and Industrial Buildings

The intended use of Verdigris hardware systems is to monitor any motor control centers, distribution panels, or electrical panels in any building.

Breaker Panel Types Served	Data Available to You
The Verdigris EV1 works with a near limitless range of breaker boxes, sub-panels, and electricity mains serving any building type. The system hardware can be mounted externally on the outside of breaker panels or junction box. • Panel and voltage types (up to 42 breakers/panel): ◦ Single-phase 100-277V ◦ Split-phase 100-277V ◦ Three-phase 120/208V ◦ Three-phase 240/416V wye ◦ Three-phase 277/480V wye ◦ Three-phase 277/480V delta* • Frequency: 50-60 Hz • Current measurement range (Amperage): 1A-14,000A **Additional equipment required, and accuracy may be impacted.*	Your high resolution data is transmitted wirelessly through WiFi, stored on the cloud, and is available 24/7 from any desktop, laptop, tablet, or smartphone web browser. You can also download a csv of your data or connect to our API at anytime. • Precision: 10mW • Sampling frequency: up to 7.68kHz • Data access via API: unlimited • Historical data availability on the web: ◦ 1-minute: indefinite ◦ 15-minute: indefinite ◦ 1-hourly: indefinite ◦ Daily: indefinite

Major Steps for Installation and Commissioning

Getting a Verdigris EV1 up and running consists of two parts: installation and commissioning. Both parts must be completed successfully for data to be monitored and accessible.

A. Installation
1. Prepare Installation
2. Install Voltage Tap
3. Install and Connect CTs
4. Mount Energy Data Gateway
5. System Checks & Clean Up

B. Commission Energy Data Gateway

Follow this instruction manual for both parts A and B.

Technical Specifications

Energy Data Gateway

- Physical Dimensions: 10.25 x 3.5 x 3.5 inch [260 x 88 x 88 mm]
- Voltage Range: 100-277 VAC CAT III*
- Frequency Range: 50-60Hz
- Current Rating: 300mA
- Cable Max Voltage: 600V
- Temperature Range: 0-40°C
- ADC Accuracy: 16 bit
- Power Requirements: Must tap voltage from circuit breaker
- Degree of Protection: IP30

**CAT III-rated instruments are primarily used on fixed installations, distribution boards, and circuit breakers and can withstand the specified voltage range.*

Data Transmission

- WiFi: 802.11 b/g/n (2.4GHz)

Verdigris Smart CTs (CTs)

Verdigris offers two types of CTs: (1) Verdigris CTs for individual circuit breakers (≤ 60A) that wire together to fit in the tight spaces and (2) custom solutions with generic Large CTs combined with our Verdigris High Current CT Interface Module for larger amperage circuits.

	Verdigris Smart CT	**Large (High Current) CT**	**Verdigris High Current CT Interface Module**
Max Circuit Ampacities	60A per circuit	Up to 14,000A per circuit (custom sizes available)	
Accuracy	+/- 2 %	+/- 0.5% error for an individual circuit	
Physical Dimensions	2.2 x 1 x 1 inch [56 x 24 x 25 mm]	Varies by amperage	2.4 x 2.4 x 1 inch [60 x 60 x 25 mm]
Temperature Range	0-40°C		

Symbols on Equipment

De-energize Verdigris EV1 before accessing field wiring compartment.

Component List (Provided by Verdigris)

Energy Data Gateway
(1x per system)

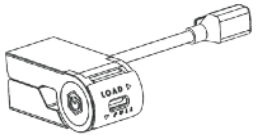

Verdigris Smart CT
(Up to 42x per system)

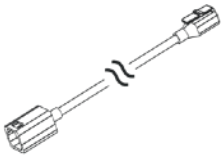

200mm, 1m, 3m CT
Chain Extension Cables
(4x per system)

1″ Chase Nipple
(Up to 1x per system)

1″ Locknut
(1x per system)

Verdigris High Current CT Interface Module
**Only for wire sizes greater than 6 AWG and/or ampacities greater than 60A*
(Up to 14x per system)

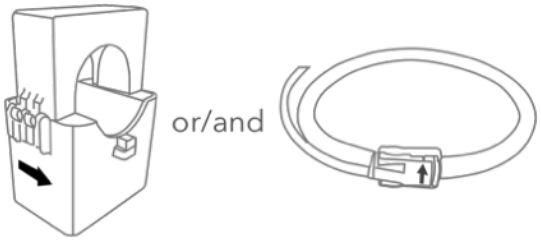

Large CT
**Only for wire sizes greater than 4 AWG and/or ampacities greater than 60A*
(Up to 42x per system)

Tools Required

For all installations, you will need the following tools in addition to Verdigris components:

Tools

- Wire stripper
- Screwdrivers, including PH-2, SL-2, S-2 (needs may vary based on size of panel screws)
- ⅛" Allen key
- Impact drill (to open the panel)
- Power drill with hole cutter (¾" or 1") or knockout punch set (¾" or 1")
- Hammer (used with screwdriver to punch prefabricated knockouts)
- Drywall saw (for recessed panels only)
- Colored electrical tape & marker (for labeling voltage tap breakers, specific to panel phase color coding)

Parts

- Colored cables
- Cable ties (up to 25 per panel)
- Wire nuts (size dependent on size of panel breaker wires to be tapped)
- 2-¾" flex conduit connectors (for recessed panels only)
- ¾" flex electrical conduit (for recessed panels only)

Recommended Voltage Tap Cables for Specific Panel Voltage Configurations

IMPORTANT
Cables selected should be UL rated to 600V

OPTION 1: Single-phase 120/240V panels, YOU WILL ALSO NEED:
- 12 gauge wire in black and white.

OPTION 2: Split-phase 120/240V panels, YOU WILL ALSO NEED:
- 12 gauge wire in black and red, and white wire for neutral.

OPTION 3: Three-phase 120/208V panels, YOU WILL ALSO NEED:
- 12 gauge wire in black, red, and blue, and white wire for neutral.

OPTION 4: Three-phase 277/480V wye panels, YOU WILL ALSO NEED:
- 12 gauge wire in brown, orange, and yellow OR black wire with colored tape (brown, orange, and yellow) to label the wire phases appropriately. You also need white wire for neutral.

OPTION 5: Three-phase 277/480V delta panels:
For instructions and equipments, go to verdigris.co/faq, select "How do I install on 480V Delta Panels?"
- Tapping a transformer
- Tapping a wall outlet

For panel configurations not listed above, use appropriately sized and colored wire as necessary. Wire colors may vary for international installations.

NOTE: Cannot tap 277/480V Delta configurations without Verdigris Voltage Measurement Module (VMM). Contact Verdigris for additional information.

Prepare Installation

Determine Panel Type

Single-Phase Panel	Phases B typically marked by black or red colored wire and Neutral typically white colored wire.		
Split-Phase Panel	Phases A and B, typically marked by 2 different colored wires going to the breakers.		
Three-Phase	Phases A, B, and C, typically marked by 3 different colored wires going into the breakers.	Wye	Panels with 4 wires.
		Delta*	Panels with 3 wires (no neutral wire).

** See section "How do I install on 480V Delta Panels?" in verdigris.co/faq*

Select Energy Data Gateway Mounting Location & Install Field Wiring Compartment (FWC)

Energy Data Gateway parts are defined in ***Fig 1***. Select a mounting location (#1 or #2) for the unit. Make sure mounting location will leave a 1" clearance around the Energy Data Gateway vent holes, 2" clearance below the sliding plate, and 3" clearance above the FWC.

NOTE: FWC and Energy Data Gateway should be mounted vertically as pictured above. It is NOT intended to mount horizontally.

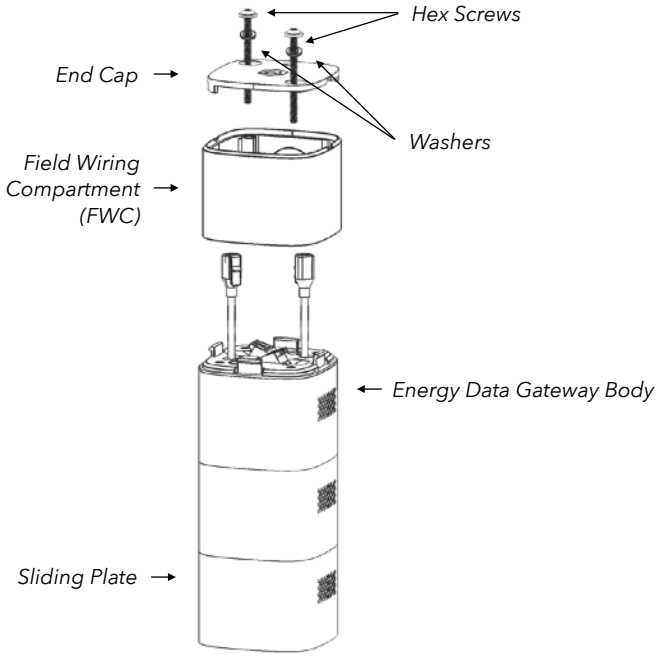

Fig 1

LOCATION 1: **Side of panel** (for surface-mount panels)
It must be at least 15.5" x 5.5" x 5.5" space next to panel. (*Fig 2*)

1. Look for an existing 1" knockout in the panel or create a new 1" knockout, using the knockout punch or a power drill with a hole cutter.
2. Detach FWC from Energy Data Gateway body by removing end cap, hex screws, and washers.
3. Place FWC over panel knockout and insert 1" chase nipple into the knockout hole. This will protect cables from sharp edges. Fasten locknut onto nipple, securing FWC onto the panel.

LOCATION 2: **Junction box**

1. Create a new 1" knockout on junction box, using the knockout punch or a power drill with a hole cutter.
2. Detach FWC from Energy Data Gateway by removing end cap, hex screws, and washers.
3. Place FWC over junction box knockout and insert 1" chase nipple into the knockout hole. This will protect cables from sharp edges. Fasten locknut onto connector, securing FWC onto the junction box.

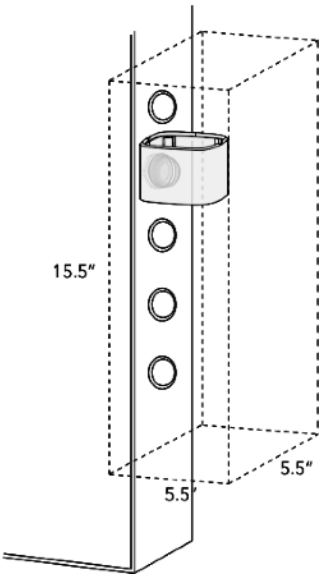

Fig 2

CONTACT US
If you are not sure where to install, call our support line at **1-844-837-3447** or email **support@verdigris.co**.

Select Breakers For Voltage Tap

Install one voltage tap on each phase of the panel. The voltage tap can be performed without shutting off any breakers if there is at least 1 spare breaker per phase. If no spare breakers are present, but there are empty slots in the panel, spare breakers can be inserted and used for the voltage tap as well.

NOTE: If you do not have one spare breaker on each voltage phase, you will need to briefly shut down the voltage tap breakers to complete this step. Please confirm with building operators that this will not interfere with operations or safety protocols.

1. Open panel and locate 1 spare breaker on each phase. Choose breakers as close to each other as possible to keep the wires organized.

   NOTE: If the panel does not have any spare breakers, shut off 1 breaker on each phase.

2. Label selected breakers 'Switch for VS sub-metering'.

   NOTE: Energy Data Gateway voltage taps have a built-in in-line fuse; does not require additional fuse protection.

IMPORTANT
For all installations: You should not insert the voltage tap cable leads in tandem with an existing branch circuit wire ("double lugging"), unless the breaker is identified for the termination of two conductors per NEC 110-14(a).

Install Voltage Tap

For Single-phase Panel

Voltage tap using **spare breakers**:

1. Ensure the breakers are turned off. Connect 1 voltage tap cable to breaker.
2. Wire the neutral. Attach the white voltage tap cable to the neutral bar.
3. Route wires through knockout and into the FWC. ***Fig 3.***

Voltage tap using **wall receptacle**:

1. If there are no spare breakers, you can power the system from a wall receptacle. Strip the cable, to identify neutral and power, you do not need ground. Please confirm with building operators and follow local jurisdiction.
2. Wire the neutral. Attach the white voltage tap cable to the neutral bar.
3. Route wires through knockout and into the FWC. ***Fig 3.***

For Split-Phase Panel

Voltage tap using **spare breakers** (*Fig 6*):

1. Ensure the breakers are turned off. Connect 2 voltage tap cables to breakers.

Fig 6

2. Wire the neutral. Attach the white voltage tap cable to the neutral bar.
3. Route wires through knockout and into FWC. ***Fig 4.***

Voltage tap using **wired breakers**:

1. If you do not have one spare breaker on each voltage phase, you will need to briefly shut down the voltage tap breakers to complete this step. Please confirm with building operators that this will not interfere with operations or safety protocols. Please follow local jurisdiction requirements for tap installs.
2. Wire the neutral. Attach the white voltage tap cable to the neutral bar.
3. Route wires through knockout and into FWC. ***Fig 4.***

For Three-Phase Panel

Voltage tap using **spare breaker**:

1. Ensure the breakers are turned off. Connect 3 voltage tap cables to breakers. ***Fig 7.***

Fig 7

2. Wire The Neutral. Attach the white voltage tap cable to the neutral bar.
3. Route Wires. Route wires through knockout and into the FWC. ***Fig 5.***

Voltage tap using **wired breakers**:

1. If you do not have one spare breaker on each voltage phase, you will need to briefly shut down the voltage tap breakers to complete this step. Please confirm with building operators that this will not interfere with operations or safety protocols. Please follow local jurisdiction requirements for tap installs.
2. Wire The Neutral. Attach the white voltage tap cable to the neutral bar.
3. Route Wires. Route wires through knockout and into the FWC. ***Fig 5.***

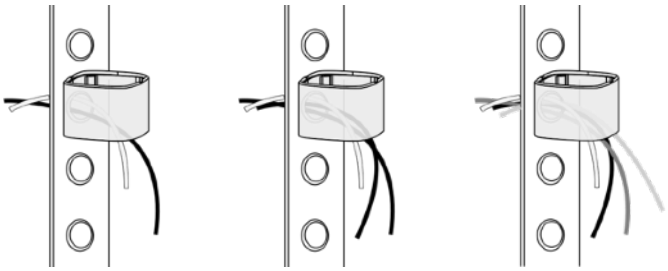

Fig 3 *Fig 4* *Fig 5*

Wire The Neutral

If the panel has a neutral bar (is a **wye configuration panel**), attach the white voltage tap cable to the neutral bar.

IMPORTANT
Warranty will be breached and considered void in connection to loss or damaged equipment due to improper wiring.

Install and Connect CTs

Select Appropriate CTs

NOTE: Select the appropriate CTs for breaker ampacity. Larger amperage circuits may require the use of Large CTs in combination with Verdigris High Current CT Interface Modules.

Verdigris offers the following CT sizes (up to 21 per chain; 42 total per system):

- Verdigris CT
  - 60A - can monitor circuits up to 60A
- Large CTs
  - 200A
  - 600A
  - 500A coil, 1000A coil
  - Larger sizes available by custom order

CONTACT US

If you are not sure which CTs are right for your breaker, call our support line at **1-844-837-3447** or email **support@verdigris.co**.

Verify CT Install Location

Make sure there is a vertical and horizontal clearance of 1" around each cable at the point of desired CT installation as shown in ***Fig 8.*** If clearance between adjacent cables is 0.5"-1.0", stagger CT installation as shown in ***Fig 9.*** If a 0.5" clearance does not exist, this product may not be suitable for your installation. Please contact your local building inspector for final determination.

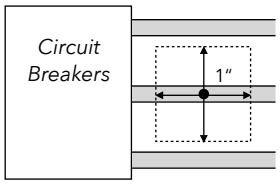

Fig 8

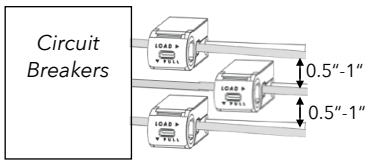

Fig 9

Install CTs

1. Open the CT loop by pulling plastic tab up and out towards 'PULL' arrow direction. ***Fig 10.***
2. Starting from the top of the panel, position CT window around circuit breaker wire making sure CT cable is facing away from the breaker.
3. Close CT loop by snapping CT ends together. It may be easier to close CT by pulling plastic tab with one hand while applying pressure on CT top & bottom surfaces with the other hand. ***Fig 11.***

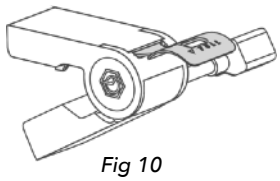

Fig 10

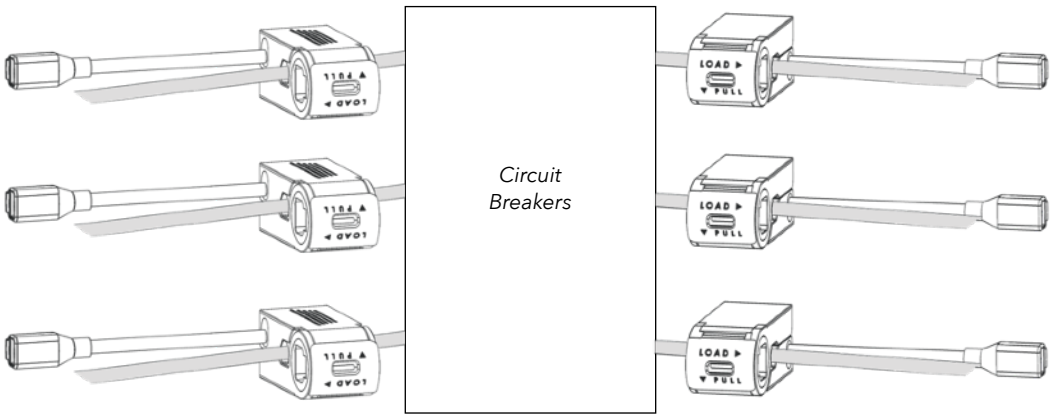

Fig 11

4. Repeat steps 1-3 with more CTs until all desired circuit wires have a CT attached. Spare breakers with no wires installed can be skipped.

   NOTE: A maximum of 21 CTs may be installed in continuity. This means up to 21 CTs (or up to 7 Verdigris High Current CT Interface Modules) may be mounted on either side of a panel, which covers a standard 42 circuit panel.

IMPORTANT

The 'LOAD' arrow should point in the direction of current flow (i.e. left breaker CT 'LOAD' arrow should point to the left, and vice versa for the right breaker CTs).

Make sure individual CTs are attached to desired circuit wires before daisy chaining CTs together (see Connect Multiple CTs section on p.11).

CTs must be securely closed for accurate data collection.

About Large CTs & Verdigris High Current CT Interface Modules

Large CTs can be installed around a conductor. There are two types of CTs: split-core hinged CTs and Rogowski coils. *Fig 12.*

1. Open the Large CT:
   - Split-core Hinged CTs: Unlatch the CT at the opposite end of the hinge by lightly pulling up and lifting the latch.
   - Rogowski Coils: Squeeze the ends to release the latch and open the coil.
2. Wrap the opening of the CT around the large circuit wire.

IMPORTANT
Large CTs must be oriented properly, otherwise inaccurate data may result. Large CTs should be mounted such that the load arrow points in the direction of the load on the circuit. In most cases, the arrow points away from the breaker. For hinged CTs, if it is difficult to see the load arrow, the CT label should be mounted with the label towards the source.

3. Securely close the CT.
   - Split-core hinged CTs: Click the latch closed. Double check for the correct CT orientation via the load arrow or CT label.
   - Rogowski Coils: Squeeze the ends to release the latch and insert end of the coil. Double check for correct CT orientation via the load arrow.
4. Insert the 2 wire leads from the Large CT into the Verdigris High Current CT Interface Module terminal block. Match the colors of the wire leads with the black and white ports in the Verdigris High Current CT Interface Module (black on the right, white wire on the left). ***Fig 13.***
5. Orient the Verdigris High Current CT Interface Module terminal blocks on each side of the panel as shown in ***Fig 14***.
6. Attach Large CTs to the Verdigris High Current CT Interface Module in order of 1, 2, 3 as shown in ***Fig 14.***
7. Using the magnet on the bottom of the Verdigris High Current CT Interface Module, mount it to any grounded metal surface in the panel, such as the side or back walls.

NOTE: CT chains and Large CTs/Verdigris High Current CT Interface Modules can be used interchangeably in terms of order. For example, on the left side of a panel, the installation could begin with 15 CTs, followed by 3 Large CTs with a Verdigris High Current CT Interface Module, followed by another 3 CTs.

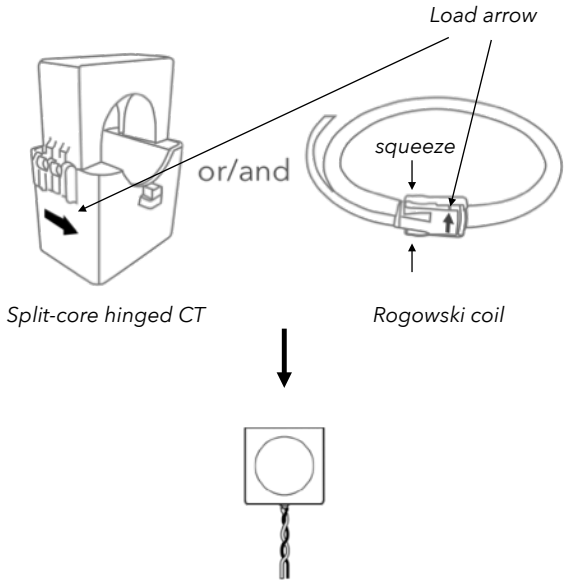

In this installation manual, we will use this symbol to represent large CTs.

Fig 12

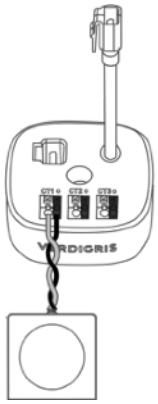

Fig 13

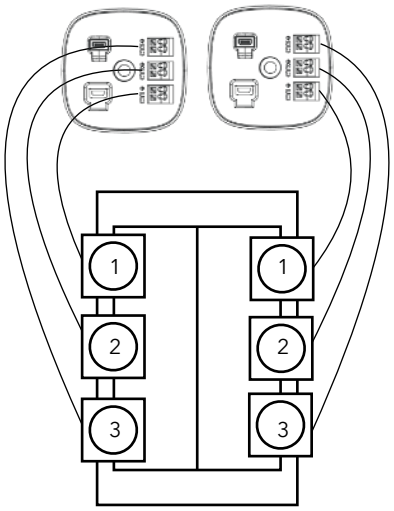

Fig 14

IMPORTANT
For earlier generation Verdigris High Current CT Interface Modules, with serial numbers starting with JGE10000*, please use ordering 3-2-1, from top to bottom. Newer Verdigris High Current CT Interface Module models JGE10001* and above will use 1-2-3, from top to bottom.

Connect Multiple CTs

Daisy chain CTs together. ***Fig 15.***

1. Starting at the top left breaker, insert CT cable latch into the female cable connector on the CT directly below.
2. Repeat until all CTs have been connected on the selected breakers. There should be an unattached female cable connector on top CT and an unattached CT cable on the bottom CT.
3. Repeat steps 1 & 2 for the right breakers, starting at the top CT.

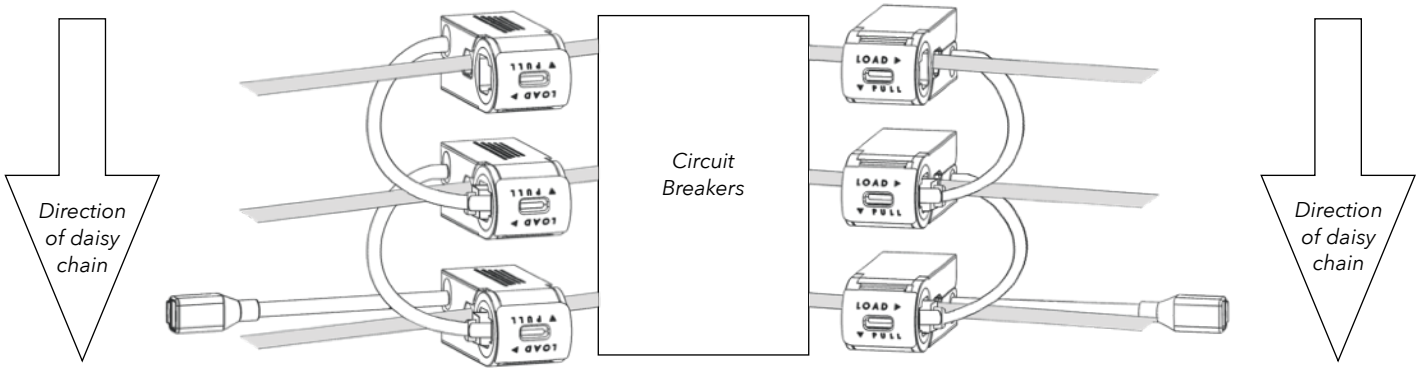

Fig 15

Connect Multiple Verdigris High Current CT Interface Modules

If your panel installation requires multiple Verdigris High Current CT Interface Modules:
Connect the cable pigtail from the Verdigris High Current CT Interface Module to the input port of the next Verdigris High Current CT Interface Module. A CT extension cable may be used if the Verdigris High Current CT Interface Modules are positioned such that the pigtails do not reach. ***Fig 16.***

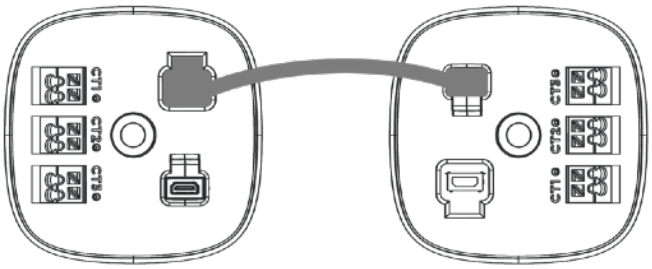

Fig 16

Connect CTs

Connect CT chain using extension cables and route wires through knockout into FWC.
Fig 17.

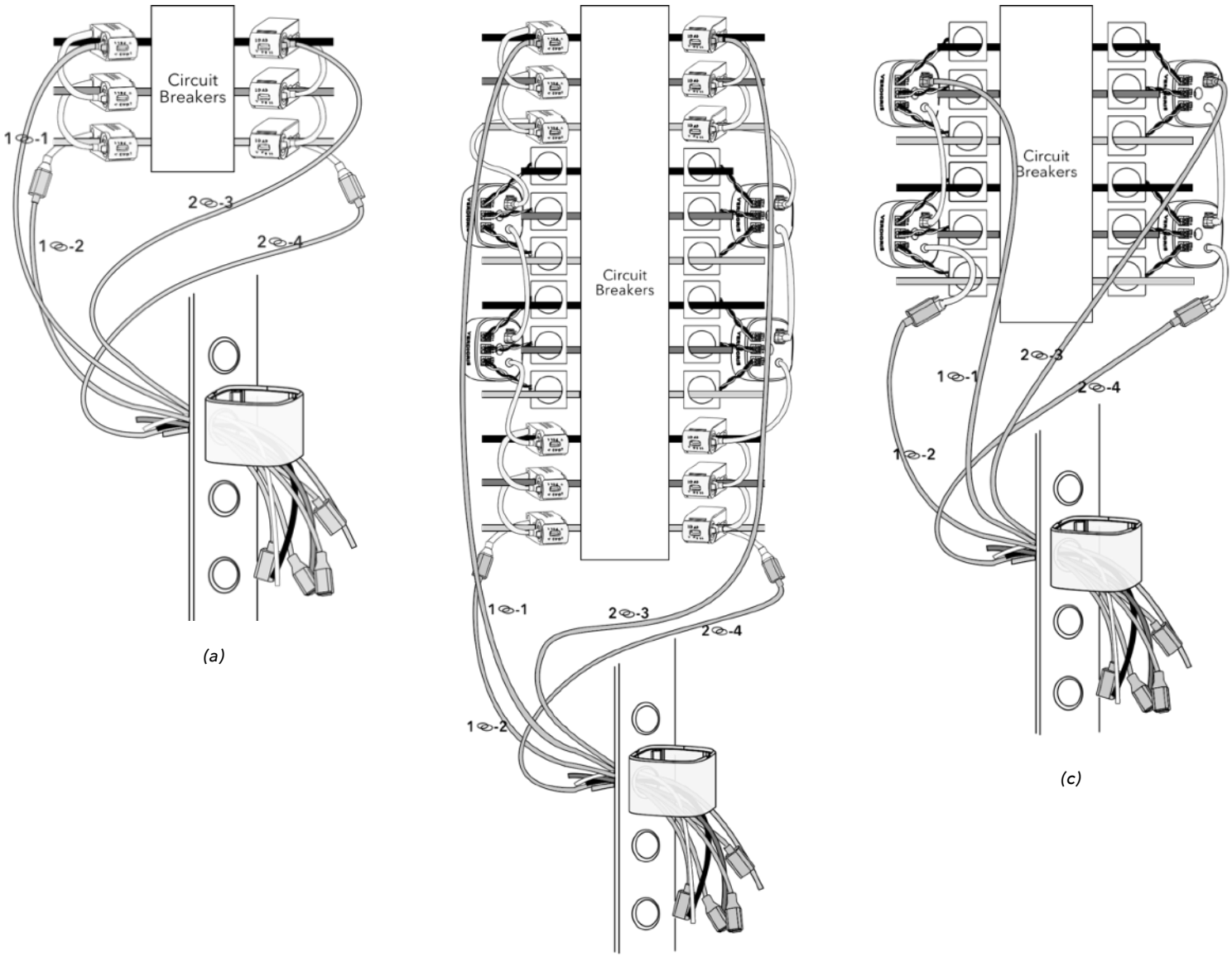

Fig 17

IMPORTANT
The maximum cable length for an entire chain loop is 8m.

Connect CTs to the Energy Data Gateway

FOR INSTALLATIONS USING ONLY CT CHAINS:

Using the CT extension cables to connect left & right CT chains to the corresponding 1 & 2 female and male connectors on the Energy Data Gateway, as shown below. *Fig 18.*

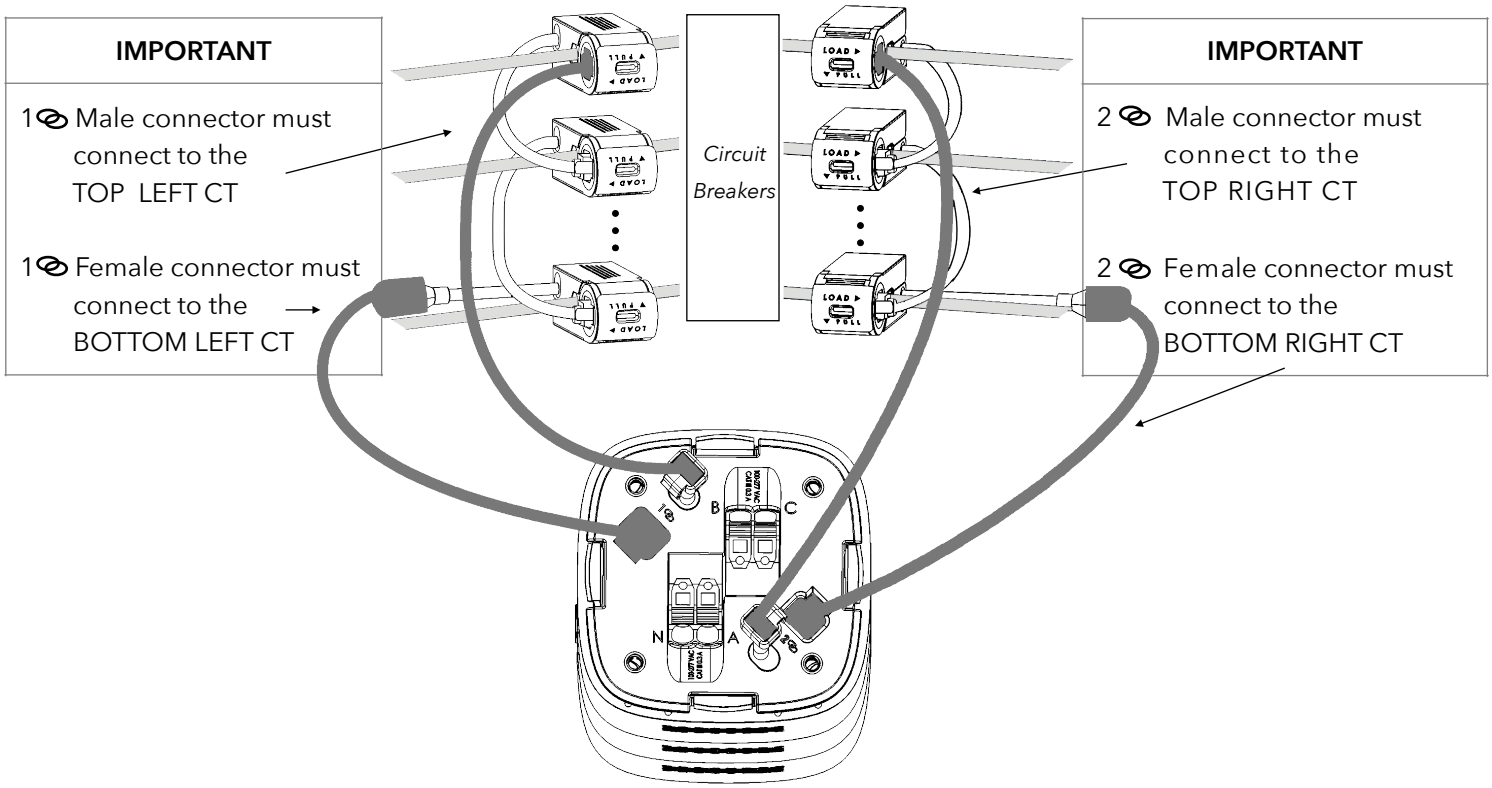

Fig 18

For installations with CTs on only 1 chain

When there are not CT(s) for 1, connect 1 male connector to 1 female connector.

IMPORTANT
Use chain 2 when there is only one sensor chain.

Use two CT extension cables to connect CT chain ends to the corresponding 2 female and male connectors on the Energy Data Gateway. *Fig 19.*

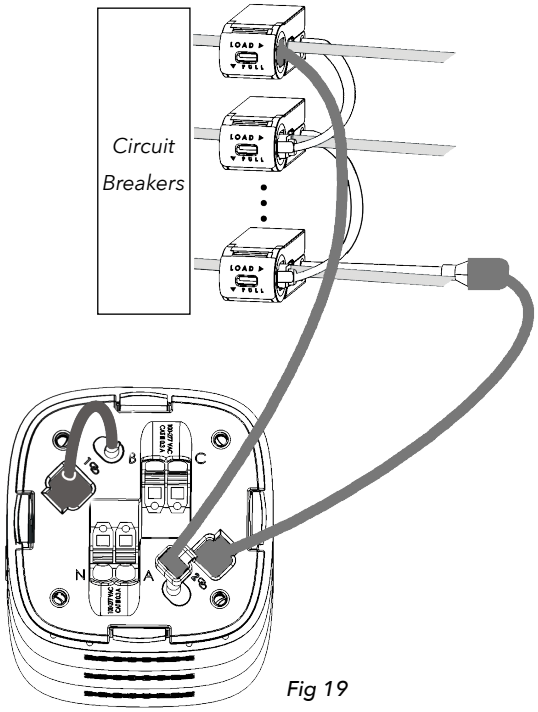

Fig 19

FOR INSTALLATIONS USING ONLY VERDIGRIS HIGH CURRENT CT INTERFACE MODULES:

Use CT extension cables, connect Verdigris High Current CT Interface Module chains to the corresponding 1 & 2 male & female connectors on the Energy Data Gateway as shown below. *Fig 20.*

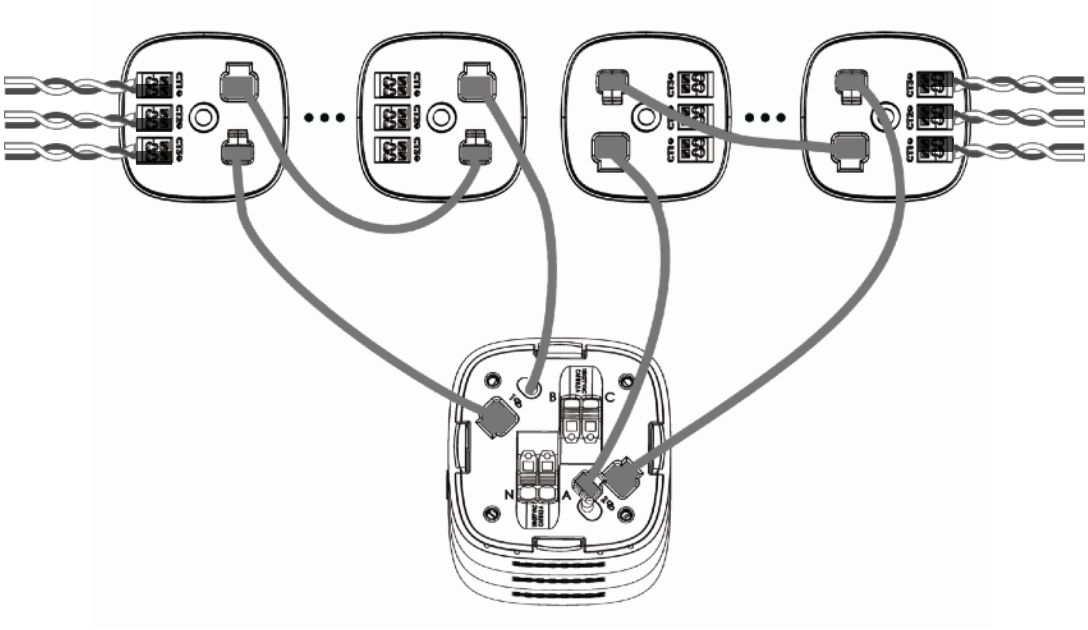

Fig 20

For installations with Verdigris High Current CT Interface Module(s) on only 1 chain

When there are not Verdigris High Current CT Interface Module(s) for 1, connect 1 male connector to 1 female connector.

Use two CT extension cables to connect Verdigris High Current CT Interface Module chain ends to the corresponding 2 female and male connectors on the Energy Data Gateway. *Fig 21.*

IMPORTANT
Use chain 2 when there is only one sensor chain.

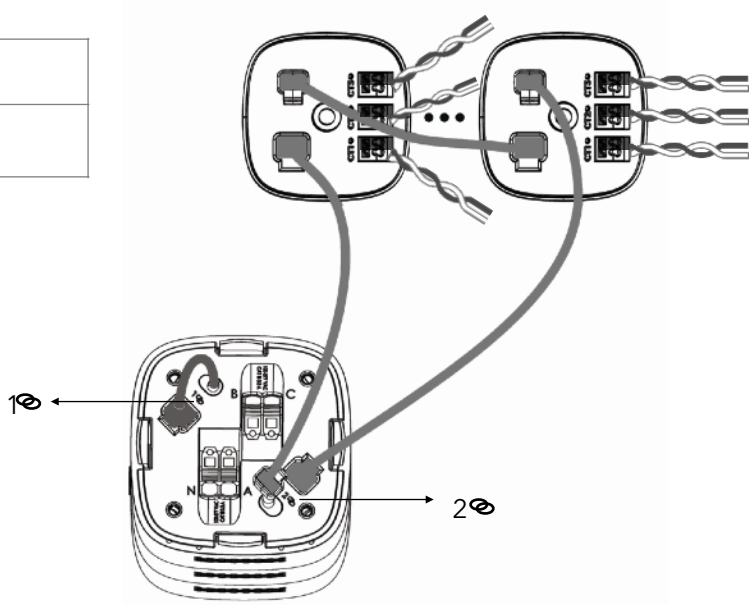

Fig 21

FOR INSTALLATIONS USING CTS AND VERDIGRIS HIGH CURRENT CT INTERFACE MODULES:

Using CT extension cables, connect Verdigris High Current CT Interface Module/CT chains to the corresponding 1 & 2 female and male connectors on the Energy Data Gateway, as shown below. *Fig 22.*

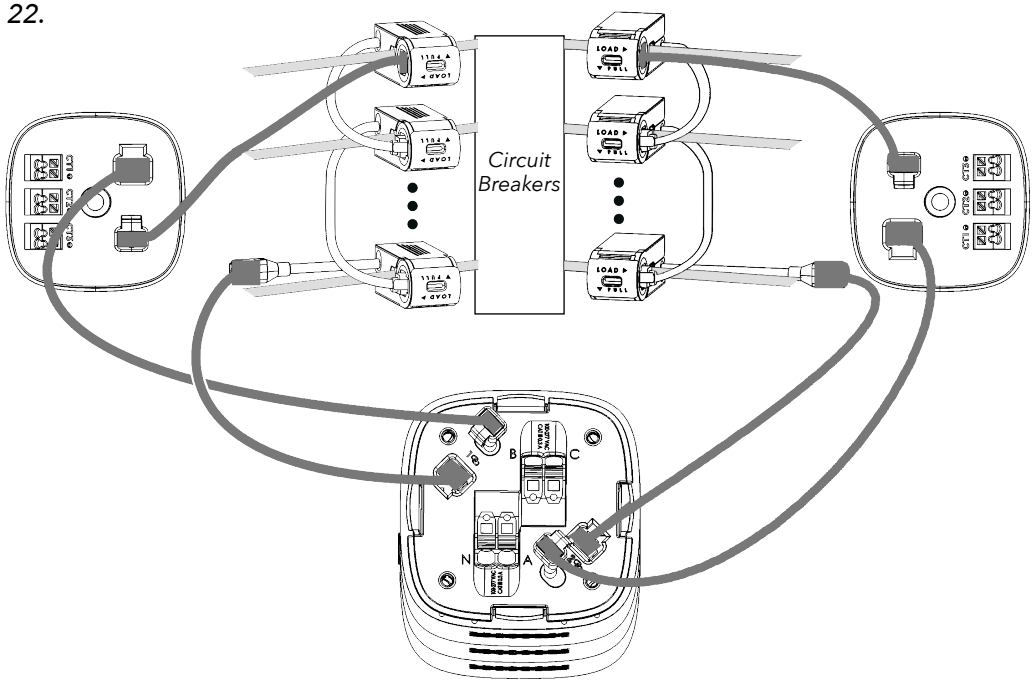

Fig 22

For installations with Verdigris High Current CT Interface Module/CT(s) on only 1 chain

When there are not Verdigris High Current CT Interface Module/CT(s) for 1, connect 1 male connector to 1 female connector.

Use two CT extension cables to connect Verdigris High Current CT Interface Module/CT chain ends to the corresponding 2 female and male connectors on the Energy Data Gateway. *Fig 23.*

IMPORTANT
Use chain 2 when there is only one sensor chain.

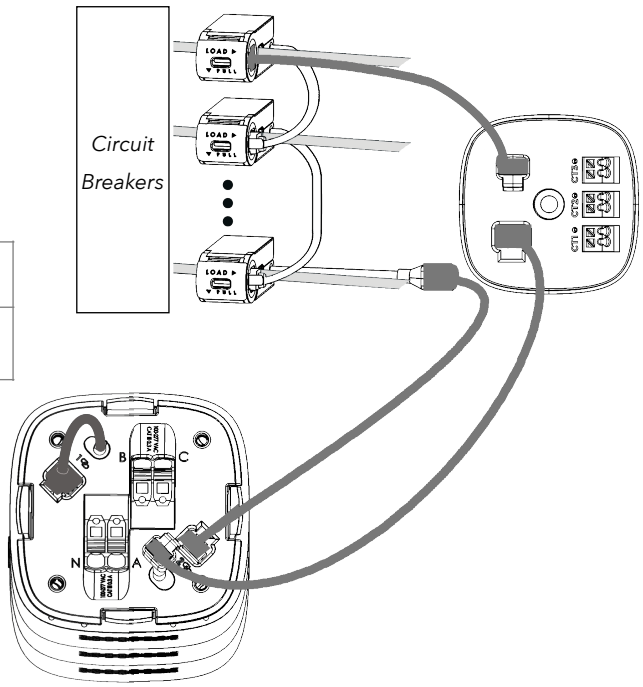

Fig 23

Connect Voltage Cables to Energy Data Gateway

- Single Phase Panel. *Fig 24.*
  - Connect Neutral to 'N' terminal.
  - Connect remaining 1 wire into 'B' terminal.
- Split Phase Panel. *Fig 25.*
  - Connect Neutral to 'N' terminal.
  - Connect remaining 2 wires into 'A', 'B' terminals. Be sure to match each wire to the correct phase.
- Three-Phase Panel. *Fig 26.*
  - Connect Neutral to 'N' terminal.
  - Connect remaining 3 wires into 'A', 'B', 'C' terminals.Be sure to match each wire to the correct phase.

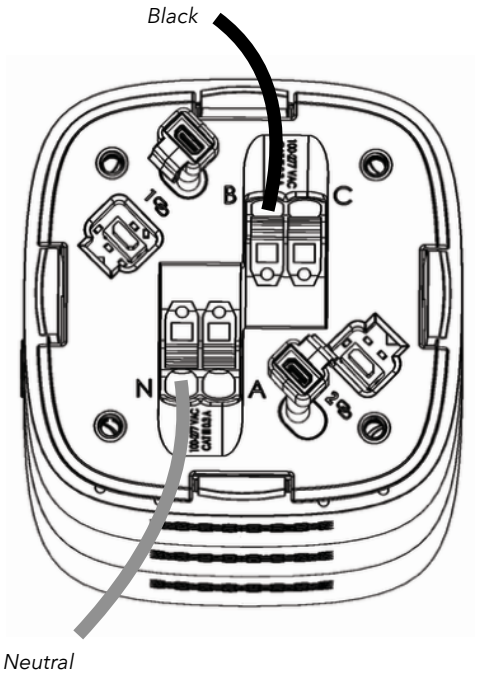

Fig 24

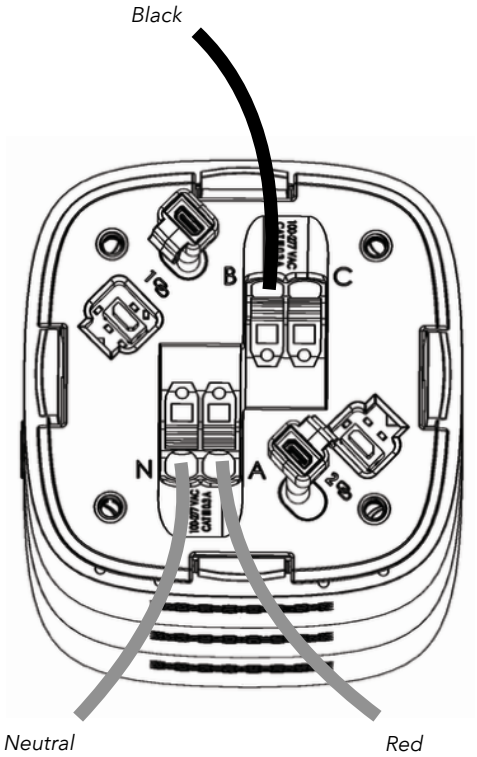

Fig 25

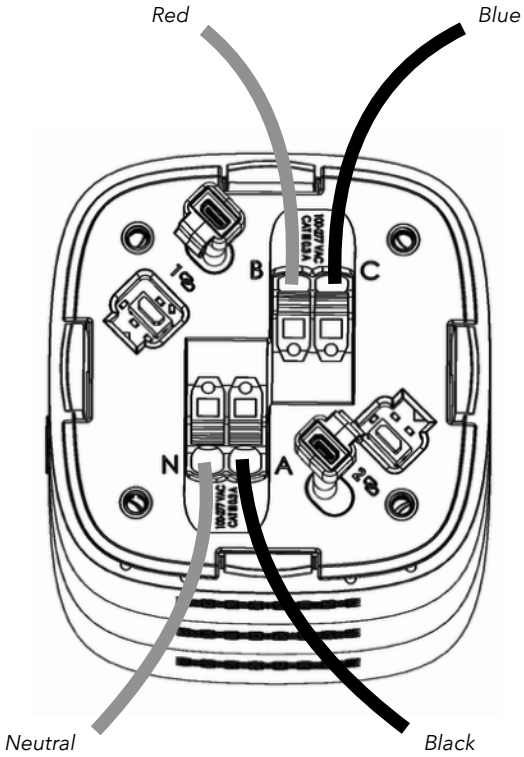

Fig 26

Location 1: Side of Panel (for surface-mount panels)

There must be at least 15.5" x 5.5" x 5.5" space next to panel in the desired mounting location.

Make sure there is a 1" clearance around the Energy Data Gateway vent holes, when mounted.

1. Feed CT extension cables and voltage tap cables through panel into FWC. ***Fig 27-a.***
2. Connect CT extension cables & voltage tap cables to Energy Data Gateway. Refer to sections 'Connect Voltage Tap Cables to Energy Data Gateway' & 'Connect CTs to the Energy Data Gateway'. ***Fig 27-b***.
3. Slide the lower plate of the Energy Data Gateway such that the indicator lights are visible. Orient the Energy Data Gateway body such that the indicator lights are visible. ***Fig 28.***
4. Bring the Energy Data Gateway body up to the field wiring compartment and snap into place. ***Fig 27-c.***
5. Fasten end cap into FWC & Energy Data Gateway body using 2 hex screws and washers. Installed Energy Data Gateway should look as follows: ***Fig 27-d.***

IMPORTANT
Energy Data Gateway body should be held until end cap has been screwed into place - snap fit alone will not securely hold Field Wiring Compartment (FWC) & Energy Data Gateway body together.

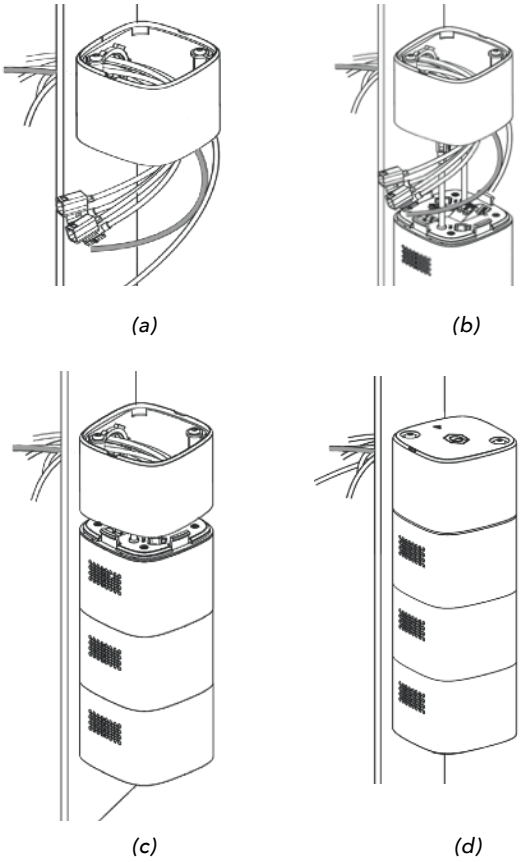

Fig 27

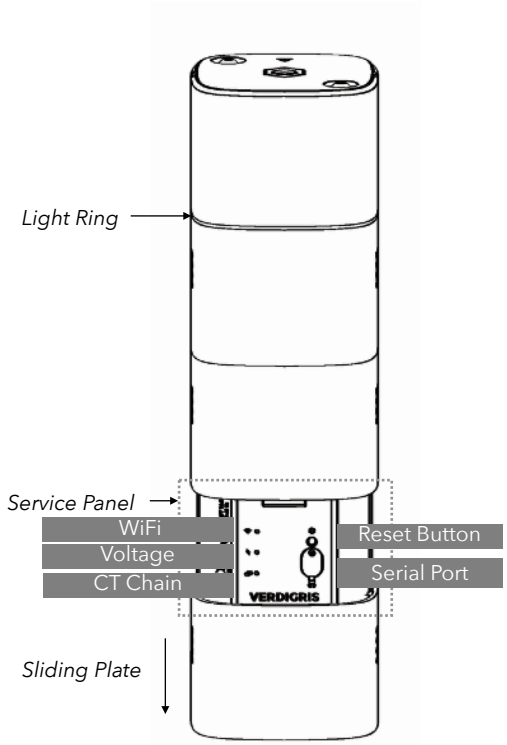

Fig 28

Location 2: Junction Box

There must be at least a 15.5″ x 5.5″ x 5.5″ space available in front of the junction box. Make sure there is a 1″ clearance around the Energy Data Gateway vent holes, when mounted.

1. Feed CT extension cables and voltage tap cables through junction box into FWC. *Fig 29-a*.
2. Connect CT extension cables & voltage tap cables to Energy Data Gateway. Refer to sections 'Connect Voltage Tap Cables to Energy Data Gateway' & 'Connect CTs to the Energy Data Gateway'. *Fig 29-b*.
3. Slide the lower plate of the Energy Data Gateway such that the indicator lights are visible. Orient the Energy Data Gateway body such that the indicator lights are visible. *Fig 28.*
4. Bring the Energy Data Gateway body up to the field wiring compartment and snap into place. *Fig 29-c.*
5. Fasten end cap into FWC & Energy Data Gateway using 2 hex screws and washers. *Fig 29-d*.

IMPORTANT
Energy Data Gateway body should be held until end cap has been screwed into place - snap fit alone will not securely hold FWC & Energy Data Gateway body together.

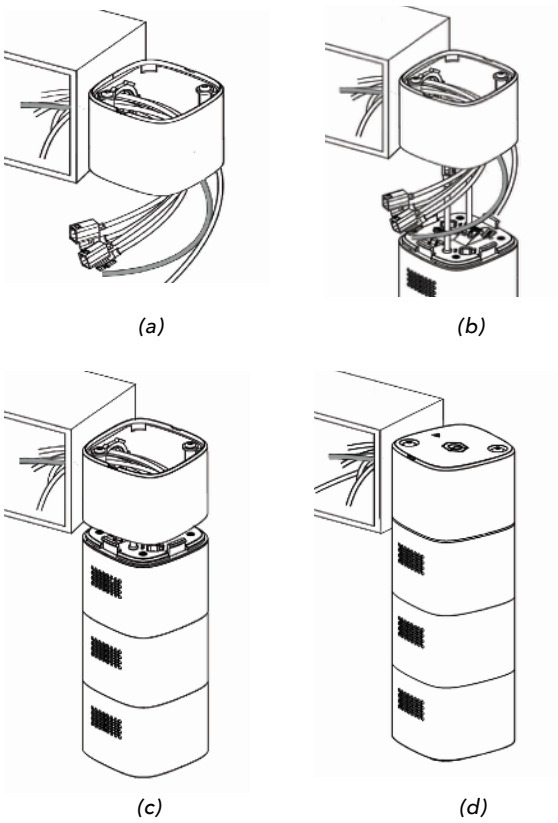

Fig 29

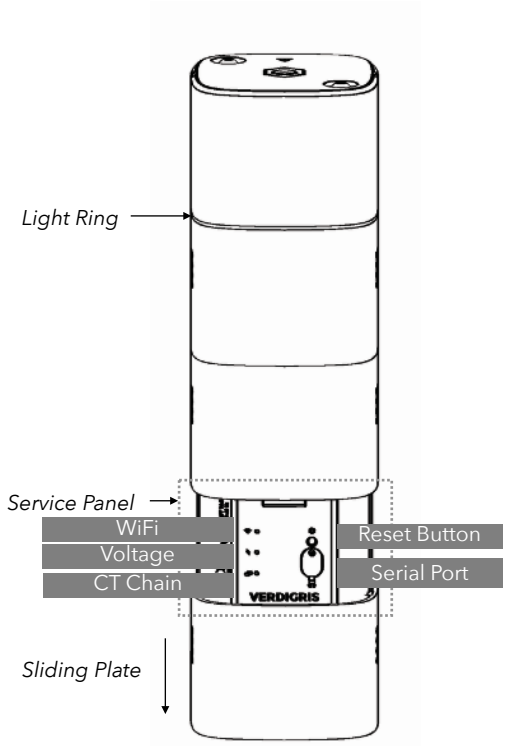

Fig 28

IMPORTANT
Double-check the installed CTs, as the physical movement of items inside of the panel from CT installation and data cable connection can cause CTs to become loose.

Check the CTs

- Check each CT to ensure that they are closed properly.
- Check all Verdigris High Current CT Interface Modules to ensure Large CT leads are properly inserted into the terminal blocks, and all Large CTs are snapped closed.
- Check all data cable connections to ensure they are properly seated.

Powering Energy Data Gateway

Once voltage tap cables have been connected to the Energy Data Gateway terminal blocks, turn breakers used for voltage tap on. The light ring will light up after up to 30 seconds. A pulsing white light indicates that the system is working correctly. *Fig 28*

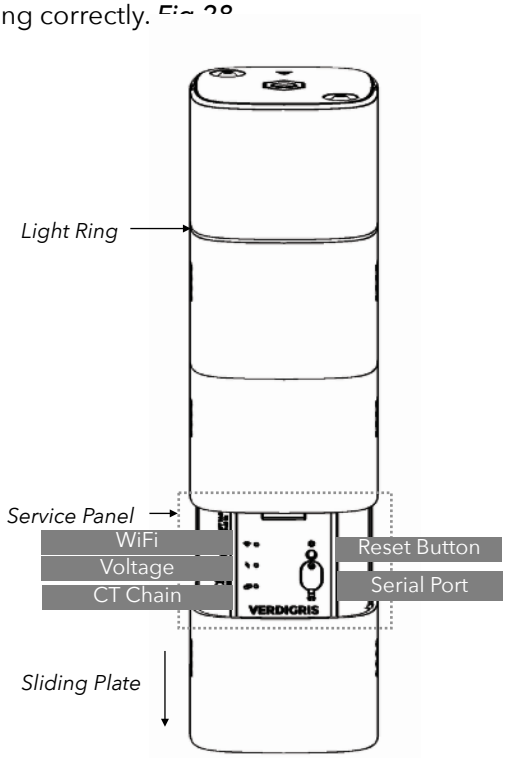

Fig 28

If the light ring is blinking red, lower sliding plate to view service panel. See 'Troubleshooting' Section.

CT and Verdigris High Current CT Interface Module Chain Check

The following procedure tests whether digital sensor data can flow to the Verdigris Energy Data Gateway by checking whether the connections are seated properly and the physical integrity of the CT and Verdigris High Current CT Interface Module chain. It is recommended to follow this procedure 1) after a Verdigris EV1 has been installed, and 2) while the panel remains open to access the CTs and Verdigris High Current CT Interface Modules. Failure to verify the physical integrity of the sensor chain through Chain Check may result in inability to gather any data from the system.

1. Power on the Verdigris Energy Data Gateway and wait for 2 minutes. Follow one of the options below to provide power:
   a. Panel Breaker: Switch on breakers that are powering the Energy Data Gateway. If the panel is de-energized for the installation then follow option b or c below.
   b. Wall Receptacle with Available Power: Follow directions on page 7 "Installing Voltage Tap" for a Single-Phase application using power cord with open wires (disregard green grounding wire if present). Plug power cord into wall receptacle and open wiring into Energy Data Gateway.
   c. Portable Battery + Inverter (all-in-one combined device or 2 separate devices): Follow directions on page 7 "Installing Voltage Tap" for a Single-Phase application using power cord with open wires (disregard green grounding wire if present). Plug power cord into the inverter and turn portable power device on (all-in-one combined device or both devices). Ensure battery is charged.
      ** Please note that Verdigris will not assume liability for damage or injury incurred from the use of portable battery and inverter packs.*

      Battery and Inverter Specification Requirements:
      I. Portable and capable of being moved around easily.
      II. Battery: 12V battery pack or 12V emergency power source for car accessories.
      III. Battery: output plug-type that is compatible with a Pure Sine Wave Inverter. These inverters are typically powered from a 12V source such as a car accessory-port or cigarette-lighter.
      IV. Inverter: Pure Sine Wave Power Inverter DC to AC
      V. Inverter: Capable of a minimum of 50W of output power.
2. CT Chain Check runs automatically when the system is

powered on and repeats every 10 seconds until Chain Check passes. The CTs and Verdigris High Current CT Interface Modules have LED lights which will display a diagnostic lighting sequence. Slide open the LED indicator display on the Energy Data Gateway to view light codes. The CT chain indicator light will change from blinking blue to red or green during chain check. Please check the Error Code table on page 21 for guidance. The LED indicator light on the Energy Data Gateway will display blinking red if the break is on chain 1 and solid red for a break in chain 2.

3. A broken, unplugged, or poorly seated CT or Verdigris High Current CT Interface Module cable will cause a difference in the flashing light patterns on the broken sensor chain. The point at which the light pattern differs indicates the area of the chain break. *Fig 29* shows an example of these differing light patterns. The possible light patterns displayed by the CT/Verdigris High Current CT Interface Modules are: On, Off, or Blinking.
   a. Reseat the cables in the chain for the 2 CTs or Verdigris High Current CT Interface Modules where the LED light pattern changes. Do not increase force or pressure when reseating the cables, instead re-insert at slightly upward angle and listen for a click.

Chain check is complete when the LED indicator light on the Energy Data Gateway for the CT chain is solid green.

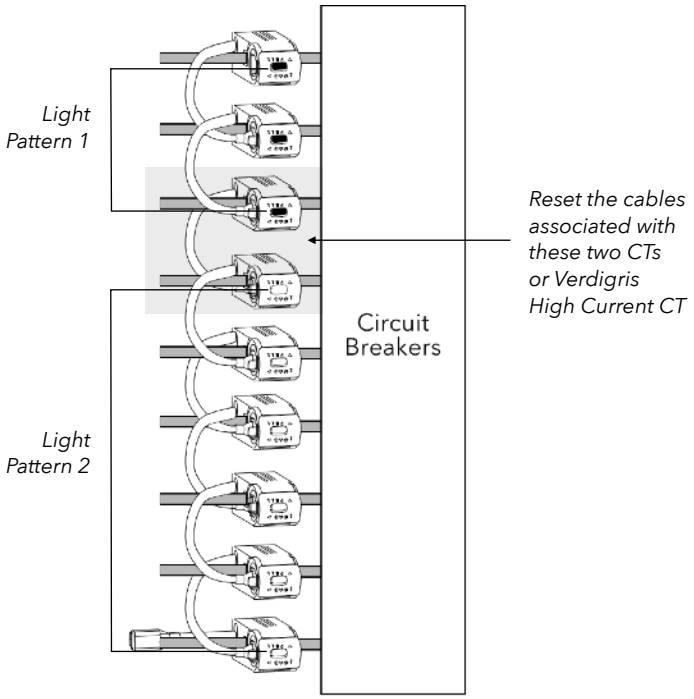

Fig 29

Clean Up and Close the Panel

- Excessive cable lengths can be coiled to save space, and to keep the interior of the panel neat and tidy.
- Excessively long wires from voltage tap cables can be cut.
- Proceed to Commission Energy Data Gateway.

Commissioning

Once installation is complete, power on the system safely. Begin setting up the system with our setup application. This final process associates the Energy Data Gateway to a panel and the circuits to equipment. Setup ensures the metered data is transmitted to the cloud.

1. The Energy Data Gateway is emitting a local wireless hotspot. Connect to the hotspot via smartphone, tablet or laptop. Look for a wifi network called "Verdigris XXXXXXXXXXX", with the serial number of the specific Energy Data Gateway. (Note: older models will only broadcast a network called "Verdigris", the serial number can be verified on the first page after connecting). It may be necessary to disconnect the regular mobile data network on your mobile device which can also be achieved by switching to airplane mode, and even enabling wifi.
2. Open any web browser and navigate to connect.verdigris.co. The system should automatically connect to the setup screen.
3. The setup application asks the user to select Wifi network connectivity. Be prepared to to identify the Wifi network name and enter the password.
4. Follow the onscreen instructions to complete the commissioning process. This process will associate each CT to an electrical circuit, and is necessary to retrieve Verdigris data from the system.

Troubleshooting: If not able to complete in the setup application, please take a series of detailed, high-resolution images or video of in side the panel and installation. Be sure breakers and CTs are visible in the photo taken. Email images to installations@verdigris.co, with the Energy Data Gateway serial number as the email subject line. The serial number is located on the service panel near the indicator lights.

Congratulations!
Your Verdigris EV1 is now installed and set-up, contact us for user access and login information.

Error Codes

If you need direct assistance, call our support line at 1-844-837-3447 or email support@verdigris.co

The light ring serves as an indicator of overall system health. If the light ring starts blinking red, there is a problem with one or more devices within the system. The solid white means everything is good.

To troubleshoot system: lower sliding plate down to view service panel pictured on the right. ***Fig 30***, refer to the table below.

Wait for at least 1 minute for the system to cycle through diagnostics. If the indicator lights are blinking white for greater than 2 minutes, please contact support.

To reboot the system: Hold the system reset button for approximately 20 seconds. Once the system powers off, release the reset button and press the button again quickly (< 1 second) to boot the system.

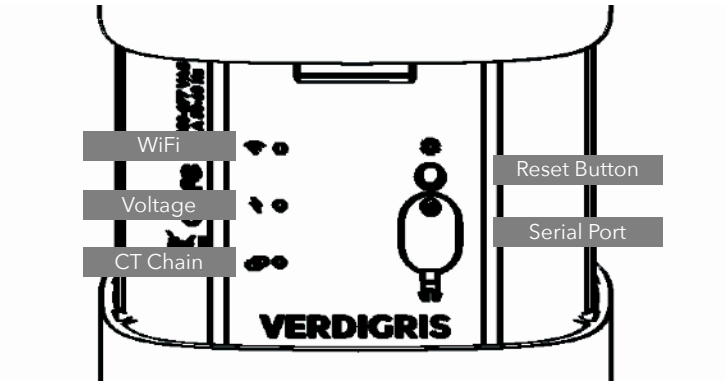

Fig 30

Service Panel Operation Mode	Energy Data Gateway LED Indicator	Interpretation	CT or Verdigris High Current CT Interface Module Indicator	Troubleshoot
Wireless (WiFi)	Blinking Red	Cannot connect to Internet, system WiFi hotspot is broadcasting		Error with connectivity, please connect to the system via your mobile device to debug wireless connectivity. (See page 20)
	Red	Cannot connect to Internet, no system hotspot is broadcasting		Error with connectivity, please press the reset button for 1second to bring up setup-tools and debug wireless connectivity. (See page 20)
	Blinking White	Busy system		
	Blinking Green	Connected, system hotspot broadcasting		
	Green	Connected, no system hotspot broadcasting		To broadcast hotspot press the reset button for one second.
Voltage	Red	Two voltage phases and Neutral attached		Confirm panel is a three-phase delta 240V, split-phase, or two-phase 120V configuration.
	Blinking White	Busy system		System is processing. CT chain indicator must be green first for LED indicator to change.
	Blinking Green	Single voltage phase and Neutral attached		Panel is connected as a single phase configuration.
	Green	Three voltage phase and Neutral attached		Panel is connection as a three-phase wye configuration.
CT Chain	Blinking Red	Break in CT chain 1	Chain 1 lights are on until break.	CT chain is not completely connected. Check for a break in the CT chain based on a difference in CT LED lights (on or off). Reseat the cables in the chain for the 2 CTs where the CT LED light pattern changes. System will cycle to check CT chain integrity every 10 seconds.
	Red	Break in CT chain 2	Chain 2 lights are on until break.	
	Blinking White	System is performing chain check.	Blink White	Wait for LED indicator to change. System will cycle to check CT chain integrity every 10 seconds.
	Green		Off	

Future Panel Modifications

In the event of panel modifications or changes to the circuits you are monitoring, your Energy Data Gateway may need to be recommissioned. Please repeat steps to Commission your Energy Data Gateway and contact Verdigris for additional support at **support@verdigris.co**.

Moving an installed and setup Energy Data Gateway to an alternate panel is not recommended nor supported and will void warranty.

CE DECLARATION OF CONFORMITY

Name and Address of Product Owner:

Verdigris Technologies, Inc

NASA AMES Research Park, Bldg 19, Room 2073, Moffett Field, CA 94035

We hereby declare that the below mentioned devices have been classified according to the classification rules and conform to the Essential Principles for Safety and Performance as laid out in the IEC61010-1:2010 standard.

Manufacturing Site: Jabil Circuits
Oakbank Park Drive
Mid Calder, Livingston, Scotland EH53 OTJ
United Kingdom

Device(s): Verdigris Meter, Revision E

Risk Classification: *IEC61010-1:2010:*
Overvoltage Category: III
Means of protection: Class 2
Degree of protection: IP41

Standards Applied: *IEC61010-1:2010*

This declaration of conformity is valid from *01-05-2017*

Authorised Signatory:

, CTO 02/13/2017

Name, Position Date

VERDIGRIS

NASA Ames Research Park Building 19, #1077
Moffett Field, CA 94035